Zu Professionelles, tragbares, kabelloses Vibrations-Percussion-Ganzkörpermassagegerät, Fitness-Tiefengewebe-Muskelmassagepistole

3 Speed Settings

Warming-up

Holistic relaxation

Daily health care

WHAT CAN BS HG-A03 DO?

DESIGNED FOR MUSCLE RELIEF:

Pleno deep tissue massager increases lymphatic flow & reduces lactic acid. Helps relieve muscle fatigue, soreness, spasms and stiffness.

01
REMOVE THE CREATINE AFTER SPORTS

02
AVOID THE PAIN AFTER SPORTS

03
EFFECTIVE CARING FOR MUSCLE GROUP

NOISE REDUCING
TECHNOLOGY
40DB

Military-grade process standard
The error accuracy of each component
*is controlled within **0.005mm.***

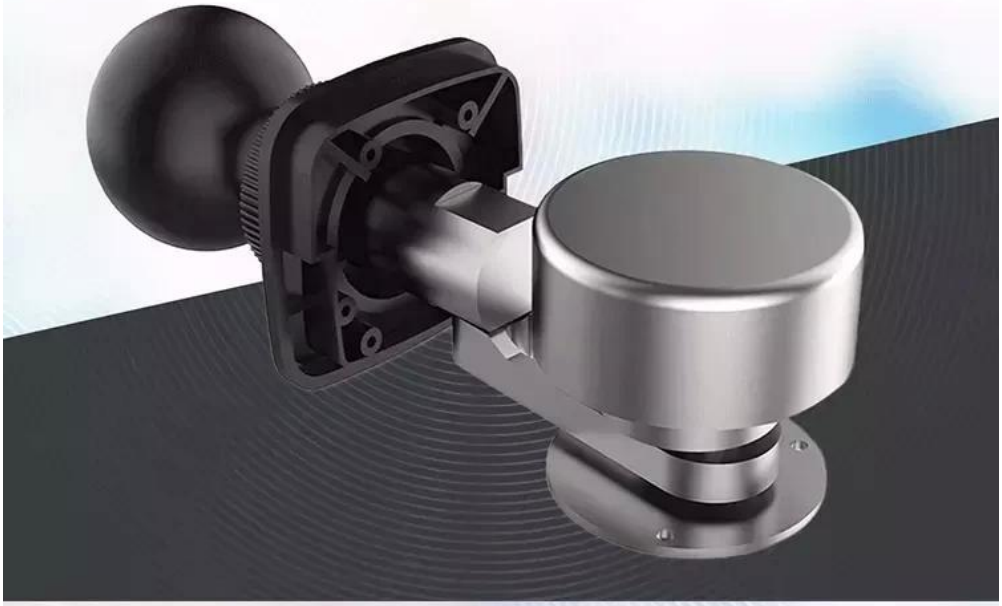

24V HIGH
Power & Brushless Motor

LONG LIFE

HIGH TORSIONAL

HIGH FREQUENCY